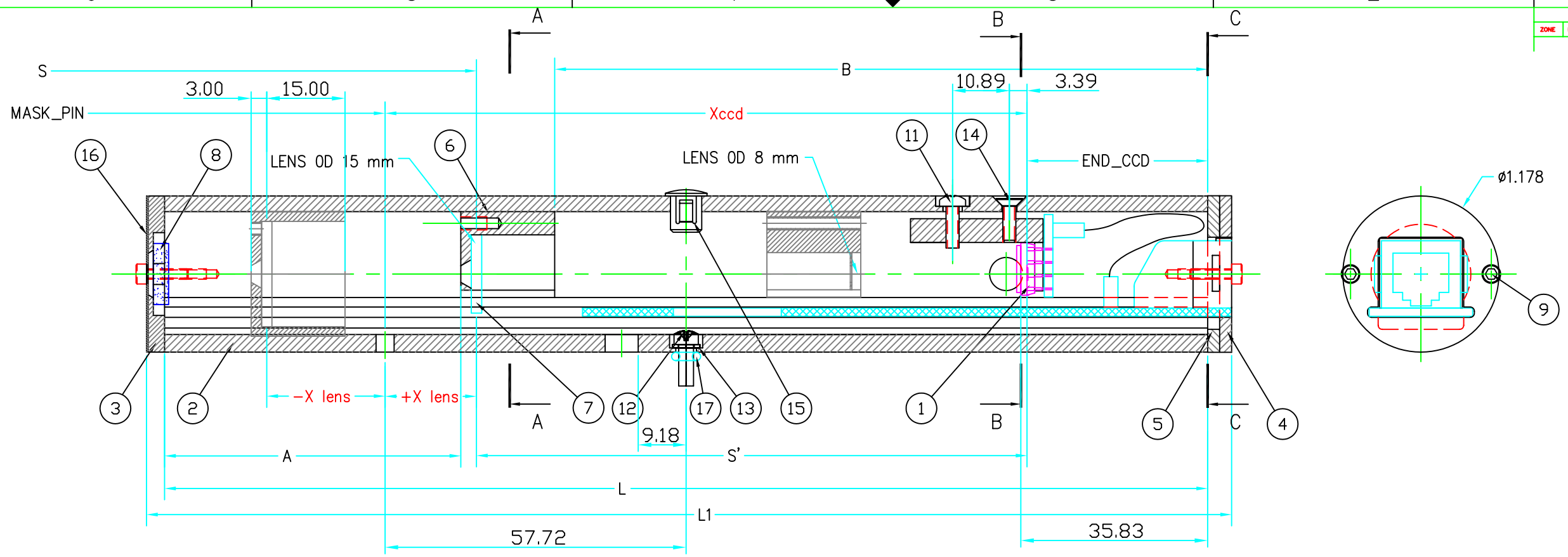

	CAMERA	M_PIN	L	L1	Focal length	Lens diameter	END_CCD	S	S'	1/m	A	B	Xlens	Xccd	QTY	DWG Number
1	EEL_CH_B	625.0	240	248.4	120	15	64.8	560.3	156.6	3.58	15.6	206.4	-64.7	91.9	56	42.16.00.00_01
2	EES_CH_B	190.0	180	188.4	50	15	62.8	208.4	67.5	3.09	46.7	115.3	18.4	85.9	64	_02

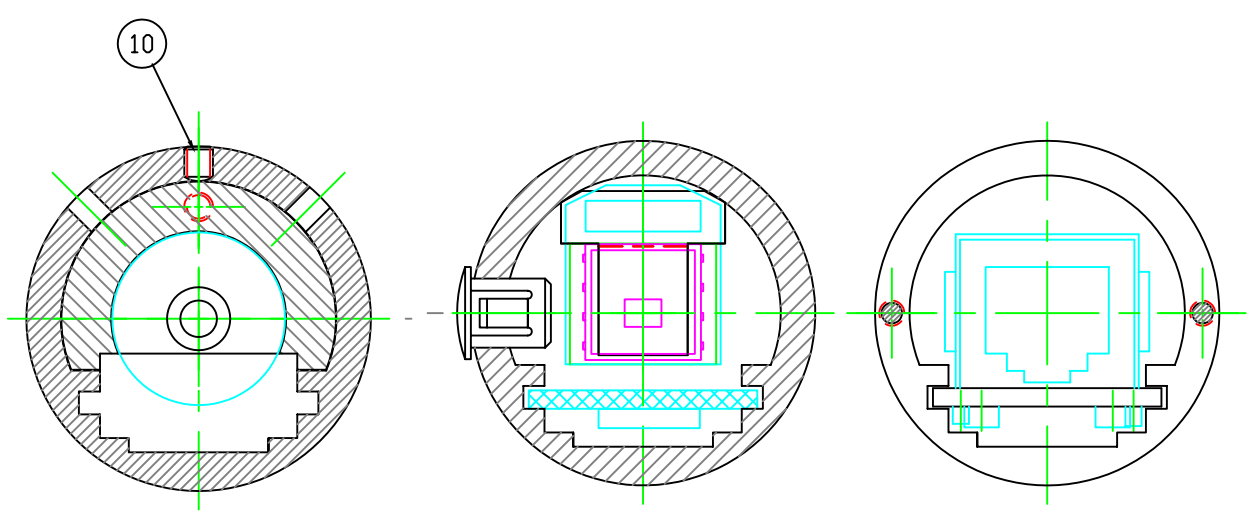

SECTION A–A
LENS OD 15 mm
SCALE 4/1

SECTION B–B
SCALE 4/1

SECTION C–C
SCALE 4/1

FIND/REF.#	QTY.	U.M.	PART NAME	MATERIAL	PART DESCRIPTION	REF. SHEET/DWG.
17	1	EA	O-RING		O-RING #4	
16	1	EA	WASHER	AL 1100		42.06.00.02-03
15	1	EA	HOLE PLUG	plastic	62 MP0250 LOCK HOLE PLUG	
14	1	EA	SQREW	stain.steel	M2.5x.45x8 FLAT HEAD MACHINE SQREW	
13	1	EA	WASHER	stain.steel	#4 SPRING WASHER,REGULAR	
12	1	EA	SCREW	stain. steel	#4-40 x.31 FILLISTER HEAD MACHINE SCREW	
11	1	EA	SCREW	stain. steel	M2.5 X 0.45 X 8 PAN	
10	1	EA	SCREW	stain. steel	M2.5 X 0.45 X 3 OVAL SET SCREW	
9	4	EA	SCREW	stain. steel	M2 X 0.4 X 8 SOCKET CAP	
8	1	EA	FILTER		10.2 mm x11.7mm x 3.0 mm	
7	1	EA	LENS		SEE CHART	
6	1	EA	LENS HOLDER	AL 6061	LENS HOLDER	42.16.00.02
5	1	EA	WASHER	AL 6061		42.06.00.02-02
4	1	EA	WASHER	AL 6061		42.06.00.02-01
3	1	EA	WASHER	AL 6061		42.06.00.02
2	1	EA	PIPE	ALUMINUM	EXTRUDED SHAPE	42.16.00.01
1	1	EA	BRACKET		CCD BRACKET ASS.	42.06.01.00

PARTS LIST

UNLESS OTHERWISE SPECIFIED:

1. DIMENSIONS ARE IN INCHES.
2. MACHINE SURFACES TO BE FLAT, SQUARE, PARALLEL & CONCENTRIC WITHIN .001 FOR 5 INCHES OR .001 TIR AS APPLICABLE.
3. MARK ALL DETAILS (EXEMPT COMMERCIAL PARTS) WITH DWG. & ITEM NUMBER.
4. BREAK ALL SHARP CORNERS .01 x 45° CHAMFER.
5. FILLETS SHOWN SHARP = .04 RAD.
6. TAPPED HOLES: UNIFIED CLASS 2B THREAD., MIN DEPTH 1.5 x DIA.,
7. C'SINK BORED & REAMED HOLES 1/16 x 45°.
8. CENTERS PERMISSIBLE.
9. DO NOT SCALE DRAWING.
10. ALL WELDING TO CONFORM TO LATEST A.W.S. STANDARDS

PERMISSIBLE VARIATION IN INCH DIMENSIONS WITHOUT TOLERANCES

FABRICATION TOLERANCES		MACHINING TOLERANCES			
BELOW 12	±0.10	DECIMAL PLACES	X & X.X	X.XX	X.XXX
12 TO 60	±0.13	BELOW 18	±0.015	±0.010	±0.005
60 TO 180	±0.20	18 TO 48	±0.030	±0.020	±0.010
OVER 180	±0.30	OVER 48	±0.045	±0.030	±0.015
ANGLE TOLERANCE ±0.5°		ANGLE TOLERANCE ±0.1°			

SURFACE TEXTURE 125

TOLERANCES ARE NOT ACCUMULATIVE

NEXT ASSY	QTY	DRAWING INFORMATION	NAME	DATE
		DRAWN	A.D.	04.16.09
		CHECKED	J.B.	
		APPROVED		

HIGH ENERGY PHYSICS LABORATORY

ATLAS – BMC
BRANDEIS UNIVERSITY

TITLE ALIGNMENT
EE PROXY CAMERA
ASSEMBLY

SIZE D | SCALE 2/1
PROJECT NUMBER 42
DRAWING NUMBER 42.16.00.00
SHEET 1 OF 4 | REVISION A